ATK-DLIMX91S

Hardware Reference Manual

V1.0

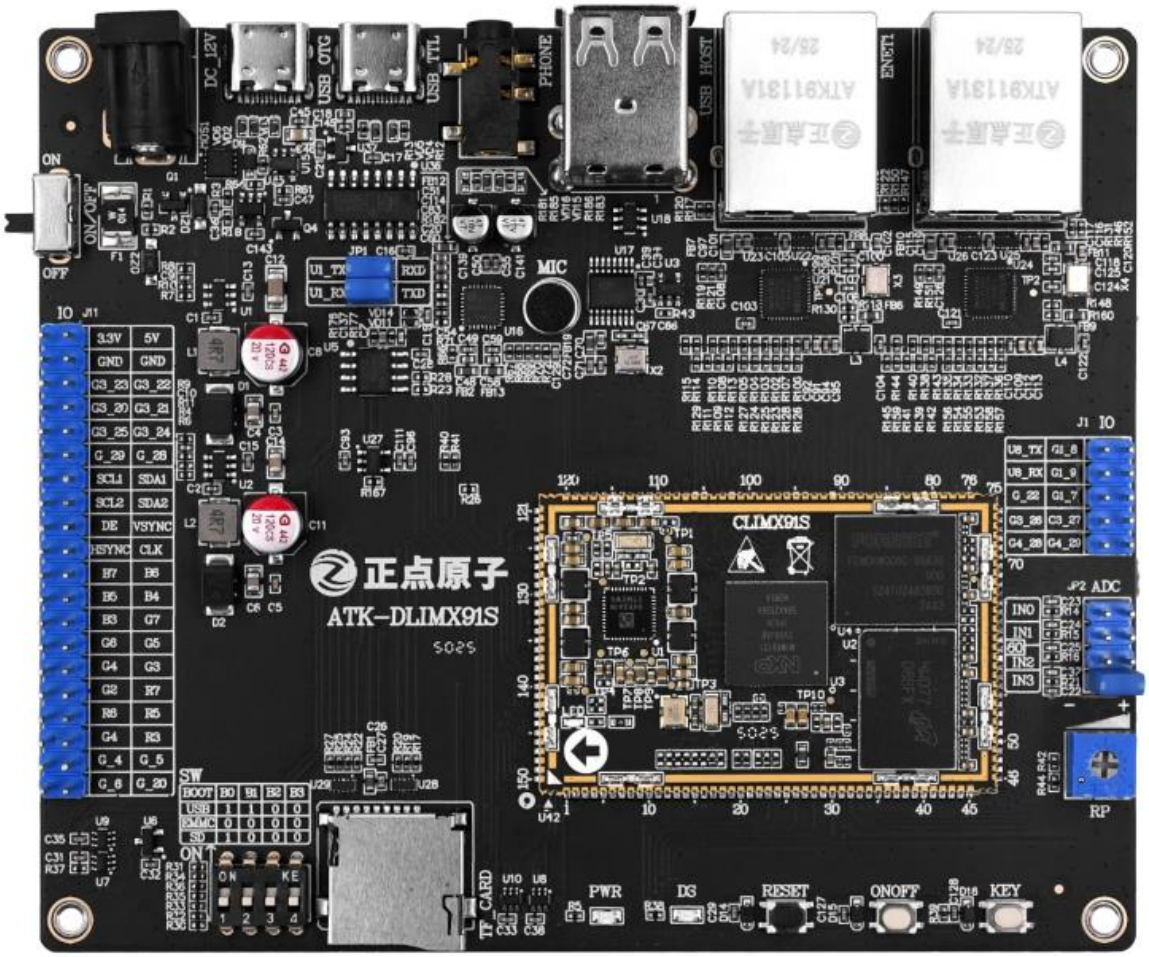

ALIENTEK

1. Shopping:

TMALL: https://zhengdianyuanzi.tmall.com

TAOBAO: https://openedv.taobao.com

2. Download

Address: http://www.openedv.com/docs/index.html

3. FAE

Website : www.alientek.com

Forum : http://www.openedv.com/forum.php

Videos : www.yuanzige.com

Fax : +86 - 20 - 36773971

Phone : +86 - 20 - 38271790

Disclaimer

The product specifications and instructions mentioned in this document are for reference only and subject to update without prior notice; Unless otherwise agreed, this document is intended as a product guide only, and none of the representations made herein constitutes a warranty of any kind. The copyright of this document belongs to Guangzhou Xingyi Electronic Technology Co., LTD. Without the written permission of the company, any unit or individual shall not be used for profit-making purposes in any way of dissemination.

In order to get the latest version of product information, please regularly visit the download center or contact the customer service of Taobao ALIENTEK flagship store. Thank you for your tolerance and support.

Revision History:

Version	Version Update Notes	Responsible person	Proofreading	Date
V1.0	release officially	ALIENTEK	ALIENTEK	2026.04.1

Catalogue

Brief 1
Chapter 1. Research on resources of ATK-DLIMX91S development board 2
1.1 Baseboard Resources of ATK-DLIMX91S Development Board 2
1.2 Resources of ATK-CLIMX91S Core Board 4
Chapter 2. Detailed Description of Development Board Baseboard Resources 6
Chapter 3. Detailed Analysis of the Development Board Baseboard Schematic 10
3.1 Definition of Core Board Connection Interface 10
3.2 DC Power Supply 10
3.2.1 Description of 5V Power Conversion Circuit 10
3.2.2 Description of 3.3V Power Conversion Circuit 11
3.2.3 Description of 1.8V Linear Regulator Circuit 12
3.3 Boot Mode Configuration Interface 12
3.4 UART Debug Serial Port (System Debugging) 13
3.5 USB_OTG Interface (System Flashing) 14
3.6 Buttons (Reset, Wake-up, User) 15
3.7 Indicator LEDs (Power Indicator, User Indicator) 16
3.8 Adjustable Potentiometer (ADC Voltage Acquisition) 16
3.9 USB HOST Interface 17
3.10 Gigabit Ethernet Interface 18
3.11 Audio Interface 19
3.12 TF Card Interface 20
3.13 EEPROM Storage 21
3.14 Expanded IO Pin Header Group 21
Chapter 4. Precautions for Using the Development Board 23

Brief

This manual introduces the hardware resources and hardware design of the ALIENTEK ATK-DLIMX91S development board, and elaborates on the functions, circuit design and relevant precautions of each on-board interface. It can serve as reference materials for users in product hardware design and solution evaluation.

If practical applications require higher standards in terms of protection level, reliability or environmental adaptability, users shall carry out targeted design and optimization according to specific application scenarios.

The product specifications, functional descriptions and related information stated in this document are for reference only and are subject to change without prior notice. Unless otherwise clearly agreed, the content of this document is merely for technical reference and shall not constitute any commitment or warranty of any form. The copyright of this document belongs to Guangzhou Xingyi Electronic Technology Co., Ltd. Without written permission, no organization or individual may copy, disseminate or use the content for other commercial purposes for profit.

To obtain the latest version of product documents, please regularly visit the ALIENTEK official download center or contact the customer service of the ALIENTEK flagship store on Taobao.

Chapter 1. Research on resources of ATK-DLIMX91S development board

ALIENTEK has developed a wide range of STM32, Linux and FPGA development boards. These boards consistently rank first in Taobao sales all year round, with a cumulative shipment of over several million units.

The ATK-DLIMX91S development board is a low-power, multi-functional hardware platform designed by ALIENTEK based on NXP i.MX9131 processor. It adopts a modular hardware structure consisting of a baseboard and a stamp-hole core board.

Next, we will briefly explore the hardware resources of the baseboard and core board of the ATK-DLIMX91S development board.

1.1 Baseboard Resources of ATK-DLIMX91S Development Board

First, let's take a look at the baseboard resource diagram of the ATK-DLIMX91S development board, as shown in the figure below.

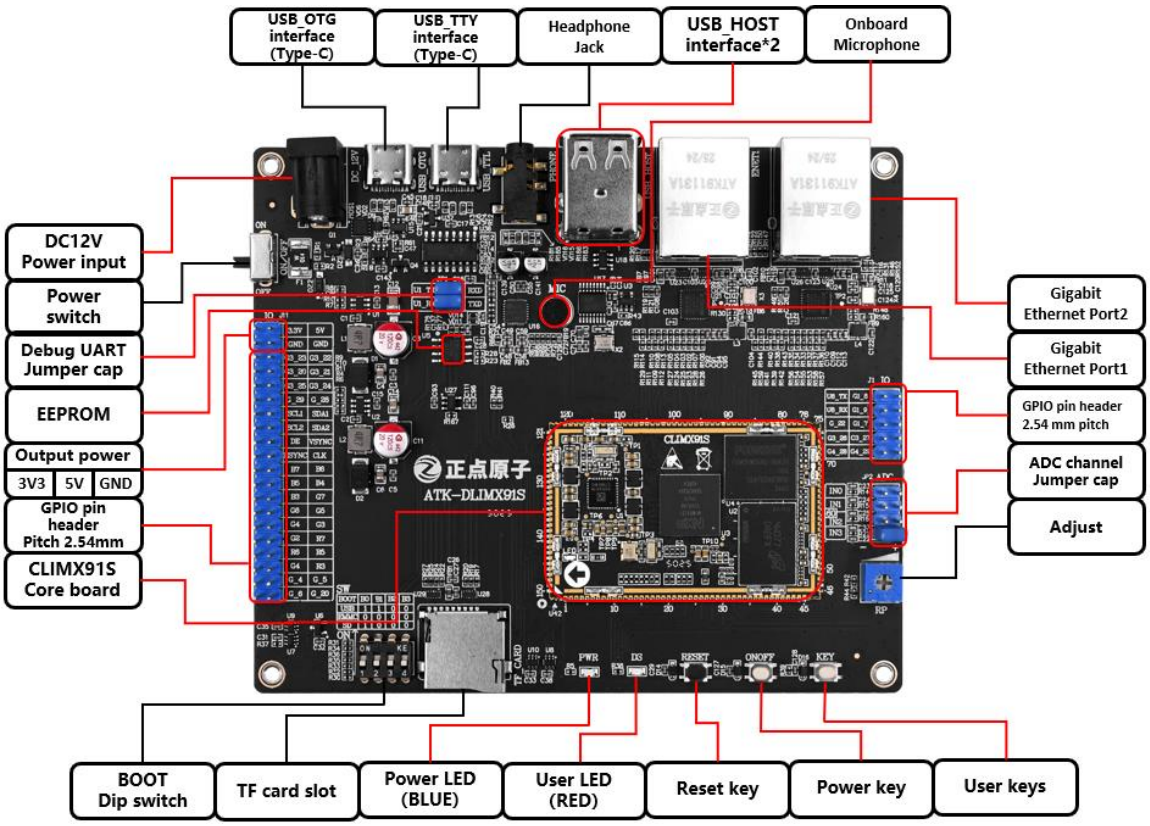

Figure 1.1-1 Baseboard Resources of ATK-DLIMX91S Development Board

As can be seen from the figure above, the baseboard of the ATK-DLIMX91S development board is equipped with abundant resources and expanded with a full range of interfaces and functional modules.

The development board has an overall dimension of 120mm×100mm. Its humanized design greatly facilitates development and application.

The on-board resources of the ALIENTEK ATK-DLIMX91S development board baseboard are listed as follows:

- 1 set of core board soldering interface, compatible with the ATK-CLIMX91S core board
- 1 blue power indicator LED
- 1 red status indicator LED
- 1 EEPROM chip with a capacity of 8KB
- 1 high-performance audio codec chip (ES8390)
- 1 headphone interface, supporting 4-segment earphones
- 1 electret microphone (MIC)
- 1 USB_TTL debug serial port with Type-C interface
- 1 channel USB_OTG interface, Type-C form factor
- 2 channels USB 2.0 HOST interfaces
- 1 adjustable potentiometer for ADC testing
- 4-channel ADC connection interfaces
- 1 boot mode DIP switch
- 2 channels 10M/100M/1000M Ethernet interfaces (RJ45)
- 1 TF card slot interface
- 1 DC 12V power input interface (recommended input voltage range: DC 6~16V)
- 1 power switch to control the power supply of the entire board
- 1 5V power output port
- 1 3.3V power output port
- 1 reset key
- 1 power on/off key
- 1 user key
- 1 set of 2×20P pin headers with 2.54mm pitch, bringing out 40 IOs
- 1 set of 2×5P pin headers with 2.54mm pitch, bringing out 10 IOs

The features of the ALIENTEK ATK-DLIMX91S development board baseboard are as follows:

1.Rich interfaces.

The development board is equipped with multiple standard interfaces, facilitating the experimentation and development of various peripheral devices.

2.Flexible design.

It adopts a combination of core board and baseboard. Most on-board resources can be flexibly configured to meet the usage requirements under different conditions.

The core board leads out most communication interfaces of the i.MX91 processor, including UART, I2C, SPI, CANFD, SDMMC, USB2.0, ADC, Gigabit Ethernet and more, greatly facilitating peripheral expansion and application development.

3.Abundant on-board resources.

It integrates a high-performance audio codec chip, Gigabit network card, EEPROM memory chip and various interface chips to satisfy a wide range of application requirements.

4.Humanized design.

All interfaces are marked with silkscreen labels for clear identification. Common peripherals are highlighted with large silkscreen printing for easy searching. The interfaces are arranged in a reasonable layout for convenient operation and use.

1.2 Resources of ATK-CLIMX91S Core Board

Next, let's take a look at the resources of the ATK-CLIMX91S core board, as shown in the figure below.

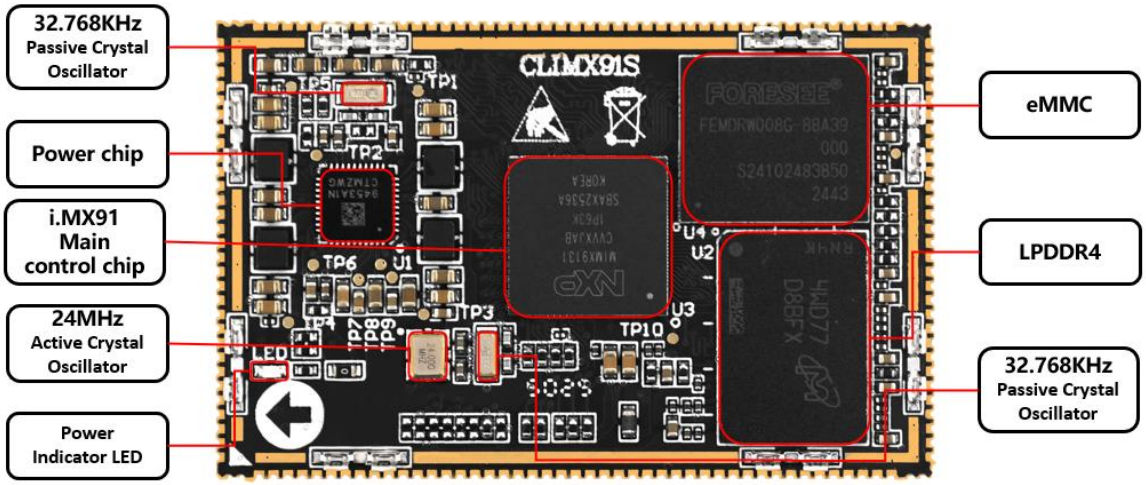

Figure 1.2-1 ATK-CLIMX91S Core Board Resources

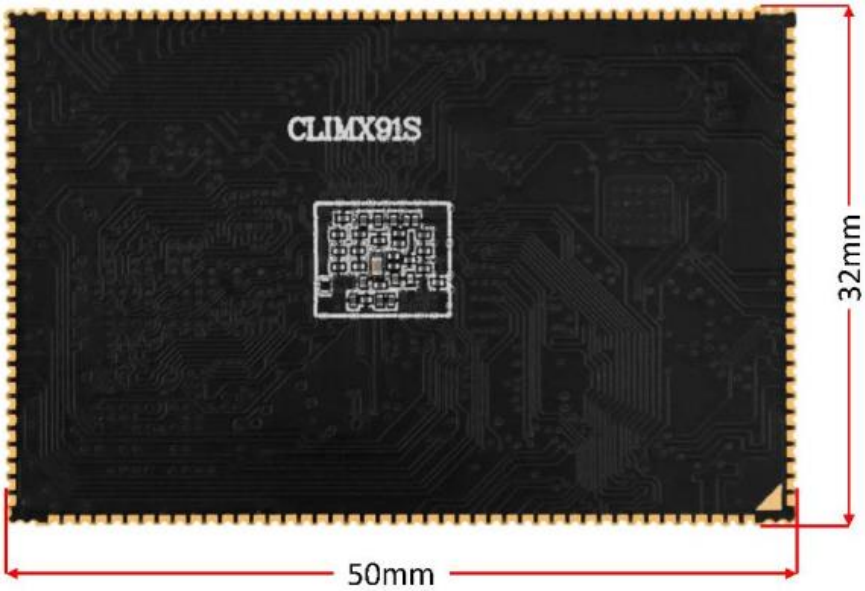

Figure 1.2-2 Back Side of ATK-CLIMX93B Core Board

The overall dimension of the core board is 50mm×32mm, featuring an ultra-compact size. It adopts stamp hole pads with a 1mm pin pitch. The overall height of the stamp hole core board is 2.5mm, making it easy to be applied to various projects.

The on-board resources of the ALIENTEK ATK-CLIMX91S core board are as follows:

CPU: MIMX9131CVVXJAB, single-core Cortex-A55 (main frequency: 1.4 GHz), LFBGA306 package, 11×11 mm.

- LPDDR4 RAM: 512 MB or 1 GB (standard configuration).

- eMMC Storage: 8 GB capacity.
- High-stability PMIC (Power Management IC).
- Pad I/O pitch: 1 mm, with a total of 150 pins.

The features of the ALIENTEK ATK-CLIMX91S core board are as follows:

1. Compact size.

The core board measures only 50 mm × 32 mm, making it suitable for integration into various projects.

2. Easy integration.

Adopting a stamp hole pad design, the core board can be easily mounted onto customer PCBs. It supports simple replacement and facilitates maintenance and testing.

3. Abundant hardware resources.

Equipped with 512 MB / 1 GB LPDDR4 memory and 8 GB eMMC flash storage, it fully meets the requirements of diverse application scenarios.

Chapter 2. Detailed Description of Development Board

Baseboard Resources

The ATK-DLIMX91S development board is equipped with a wealth of multi-functional interfaces. This section details the hardware resources of each part on the ATK-DLIMX91S baseboard, helping users fully understand its hardware configuration. Starting from the power input port at the upper left corner of the baseboard block diagram, each functional interface will be introduced in counterclockwise order.

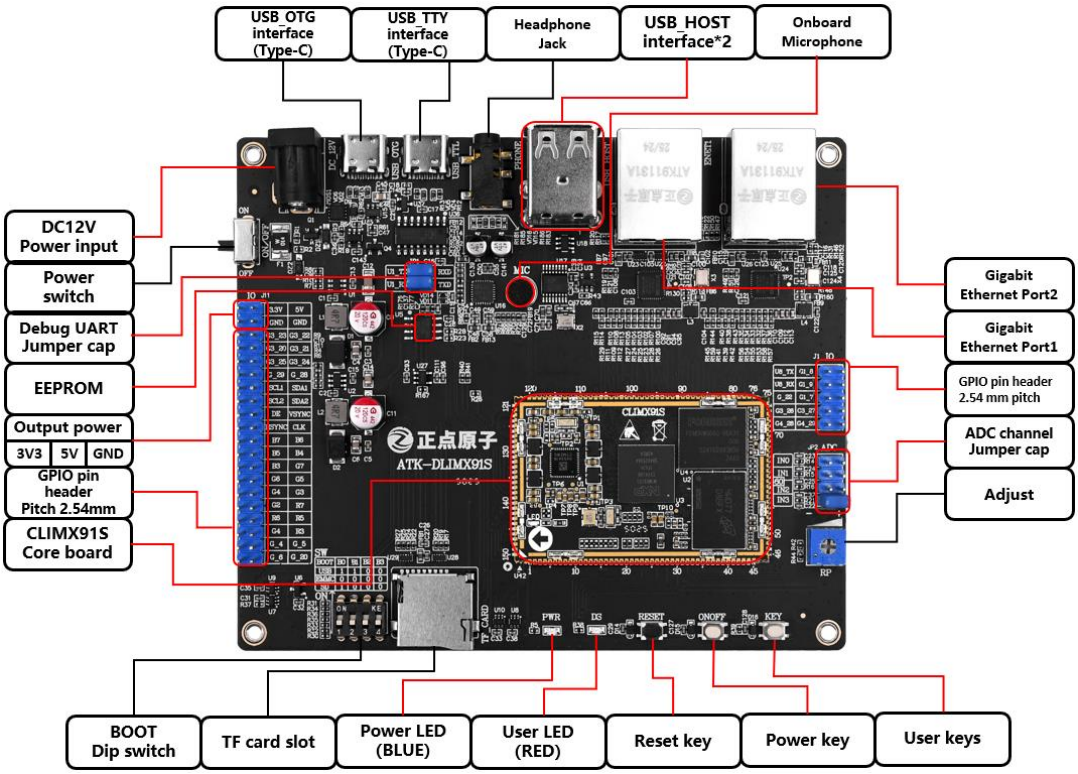

Figure 1.2-1 ATK-DLIMX91S Development Board Baseboard Resources

1. DC 12V Power Input

The development board is equipped with one external power input port (DC_IN) that adopts a standard DC power jack.

A DC-DC chip is onboard to supply efficient and stable 5V power for the entire board. Benefiting from the DC-DC solution, the development board supports a wide voltage input range. Users can easily obtain a suitable power adapter for power supply, with a rated output voltage ranging from DC 6V to 16V.

2. Power Switch

The development board is equipped with one power switch (S1), which is used to control the power supply of the entire board. It is a two-position slide switch. Slide it upward to turn on the power of the development board, and the whole board will be powered on with the power indicator (PWR) lit. Slide it downward to cut off the power supply, the entire development board will be powered down, and the PWR indicator will go out accordingly.

3. 5V Power Output

There is a 5V power output pin header (IO J11) on the baseboard, which is designed to supply 5V power to external devices.

Users may encounter troubles due to the lack of an extra 5V power supply during experiments. With this 5V pin header, a convenient and simple 5V power source is readily available.

4. 3.3V Power Output

The development board is provided with a 3.3V power output pin header (IO J11) to supply 3.3V power for external devices. Similarly, users may face difficulties in experiments without an available 3.3V power supply. With this set of 3.3V pin headers, a convenient 3.3V power source can be easily obtained. The maximum output current shall not exceed 1000mA.

5. Expanded IO Ports

The development board leads out IO ports via J11 and J1, which adopt 2×20P and 2×5P pin header assemblies respectively, providing a total of 46 expanded IO pins.

It should be noted that these expanded IO pins are not independently dedicated. Most of them are multiplexed with the pins of the on-board functional circuits of the development board. Therefore, when using these led-out IOs, users must check for conflicts with on-board functional circuits. Typical conflicts include pull-up/down resistors and IOs that are connected to other functional chips. Such conflicts may result in incorrect IO level values and communication failures of external modules. If affected by shared resources, the corresponding on-board circuits and chips need to be temporarily removed.

6. Boot Mode DIP Switch

The development board is equipped with one 4×2P black DIP switch for selecting the boot mode of the processor. It supports booting from TF card, eMMC and USB. The corresponding DIP switch configurations for each boot mode are marked on the silkscreen of the board. Users may set the DIP switch according to actual application requirements.

7. TF Card Interface

The board integrates a standard TF card interface (TF_CARD), which adopts a compact socket and is driven via the SDIO interface.

This TF card interface meets the demand for large-capacity data storage.

8. Blue Power Indicator LED

The development board is equipped with a blue power indicator LED. It keeps steadily lit when the 5V power supply of the board works normally. If the LED is off, it indicates an abnormal power supply of the development board (excluding damage to the LED itself).

9. Red Status Indicator LED

A red status indicator LED is onboard for users to reflect the operating state of the processor. Using this LED to indicate program status is an effective auxiliary debugging method during code debugging.

10. Reset Button

The development board provides one reset button (RESET), which is used to reset the core board.

11. Power On/Off Button

The board is fitted with a power on/off button (ONOFF). After the i.MX91 processor is powered on, press and hold the ONOFF button for 5 seconds to shut down the processor and cut off the power of the core board. In the shutdown state, short press the ONOFF button for 0.5 seconds to power on the processor and restore power supply to the core board.

12. User Key

The development board is equipped with one input key (KEY), which can be used for general key input by users.

13. Adjustable Potentiometer

An adjustable potentiometer with a resistance of 10K is onboard. It is connected to four ADC pins of the i.MX91 processor and can be used for ADC voltage acquisition testing.

14. ADC Connection Interface

The i.MX91 processor is provided with 4 dedicated ADC pins, all of which are connected to the adjustable potentiometer on the development board. When using the potentiometer, jumper caps need to be installed to connect the ADC pins to the adjustable potentiometer.

15. Gigabit Ethernet Interface

The development board integrates 2 channels of Gigabit Ethernet interfaces (RJ45). The i.MX91 processor contains two built-in Gigabit Ethernet MAC peripherals, supporting 10M/100M/1000M network transmission rates.

16. USB HOST Interface

The i.MX91 processor comes with two USB interfaces. The ALIENTEK ATK-DLIMX91 development board expands the USB2 port of the i.MX91 into four USB HOST channels via a USB HUB chip. Two of them are designed for USB HOST function demonstration, through which users can connect peripherals such as USB mice, USB keyboards and USB flash drives.

17. Headphone Interface

The development board is equipped with a 3.5mm headphone jack with the model PJ-327A. This interface is mainly used for stereo audio playback, supports left and right channel headphone output, and features hot-swap capability. Peripheral circuits including DC blocking capacitors, series resistors and ESD protection circuits are integrated around the interface to improve audio output stability and interface reliability.

18. Electret Microphone (MIC)

The development board integrates one electret microphone, serving as the audio recording input (MIC) to realize voice recording functions.

19. USB_TTL Debug Serial Port

One USB_TTL debug serial port is provided on the board with a USB Type-C connector. It connects to the CH343G chip to implement USB-to-serial conversion and acts as the system debug serial port.

20. USB_OTG Interface

The board is equipped with one USB2.0 Type-C OTG interface. Connected to the USB1 bus of the i.MX93 processor, it enables standard OTG functions.

With a Type-C cable, the board can be connected to a computer as a slave device for system flashing. When connected to external USB devices such as USB flash drives via an OTG cable, the development board can work in host mode.

21. EEPROM

An on-board EEPROM memory chip (model: AT24C64) is adopted, with a capacity of 8KB and an IIC communication interface, available for user data storage and testing.

22. ATK-CLIMX91S Core Board Interface

The ATK-CLIMX91S core board adopts a stamp hole package and is soldered to the baseboard through edge stamp hole pads.

It features a total of 150 pins with a 1.0mm pitch. This interface leads out core board power supplies, system control signals and multiplexed functional signals of the processor, meeting the requirements of development, debugging and application verification based on the i.MX91 platform.

Chapter 3. Detailed Analysis of the Development Board Baseboard Schematic

This section breaks down and elaborates on each circuit part of the ATK-DLIMX91S development board baseboard. It describes the conventional design functions and potential precautions of each circuit, providing references for product hardware design.

The hardware circuits of the development board may be updated, optimized and iterated in versions as required. If users develop products and projects by referring to these circuits, they shall evaluate the compatibility with project requirements and conduct necessary circuit optimization and protection design.

3.1 Definition of Core Board Connection Interface

The development board baseboard connects to the core board via 150-pin stamp hole pads with a 1.0mm pitch, enabling easy installation and replacement.

The pin definition of the core board connection interface on the baseboard is shown in the figure below. For detailed pin descriptions, please refer to the ATK-CLIMX91S Core Board Interface Datasheet.

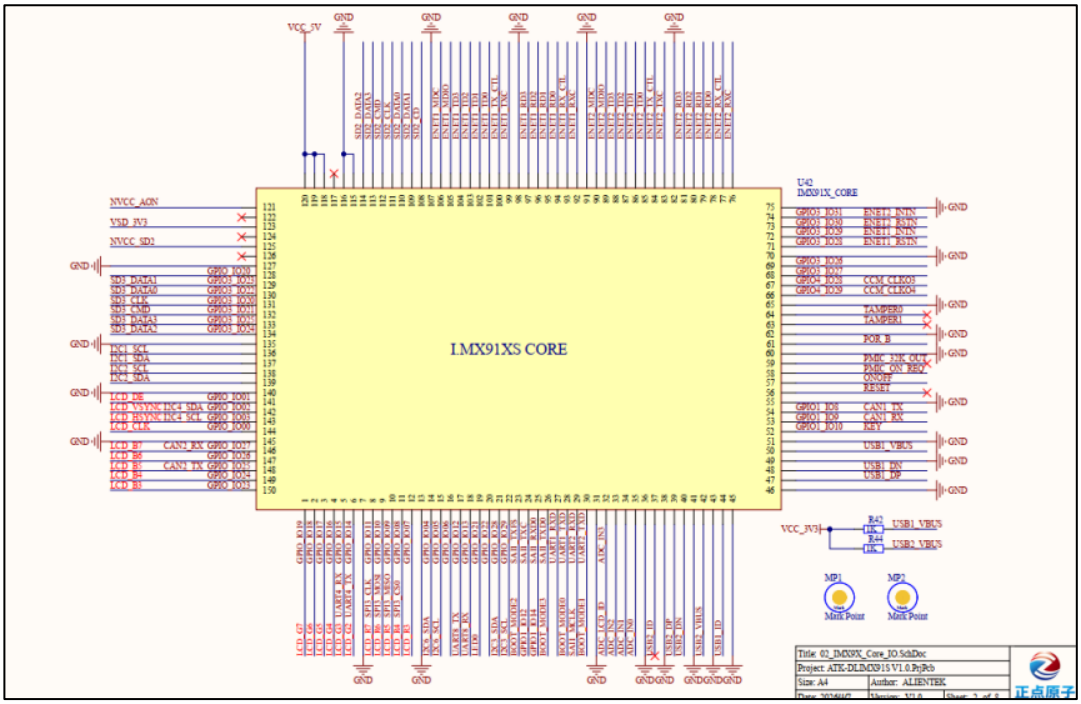

Figure 3.1-1 Pin Definition of Baseboard-to-Core Board Connection

3.2 DC Power Supply

3.2.1 Description of 5V Power Conversion Circuit

VCC12V_DCIN is stepped down and converted into a 5V power output by the step-down switching regulator U1, with the power rail marked as VCC_5V.

U1 adopts a synchronous Buck topology. Its peripheral circuits form a complete step-down solution, consisting of input filter capacitors, bootstrap capacitors, inductors, output filter capacitors and a feedback voltage divider network.

The inductor L1 and output filter capacitors jointly realize energy storage and filtering to ensure stable output voltage. Feedback resistors R7 and R8 are used to set the output voltage value. Capacitor C9 is applied for loop compensation and feedforward optimization, so as to enhance system stability and transient response performance. Based on the feedback voltage divider parameters, the designed output voltage is approximately 5V.

A TVS diode D1 is configured at the 5V power output terminal to provide surge and transient overvoltage protection for the power bus, improving the power supply reliability of external interfaces and on-board loads. Meanwhile, a power indication circuit composed of current-limiting resistors and an LED is integrated to indicate the operating status of the 5V power output.

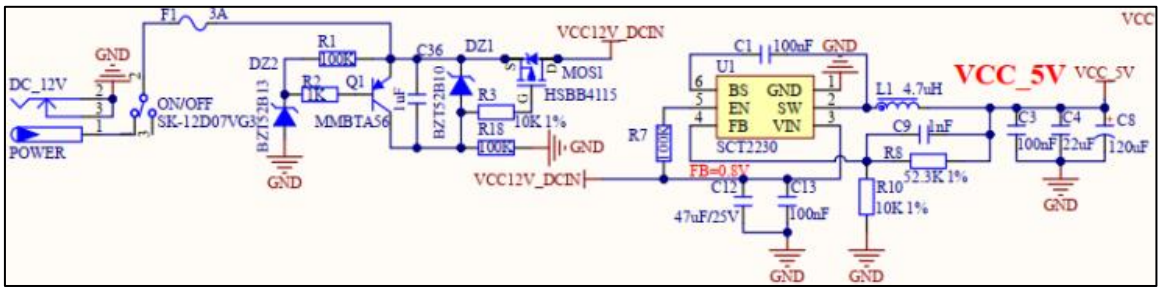

Figure 3.2-1 5V Power Conversion Circuit

3.2.2 Description of 3.3V Power Conversion Circuit

VCC12V_DCIN is also converted into a 3.3V power output by the second step-down switching regulator U2, with the power rail designated as VCC_3V3. This circuit also adopts a synchronous Buck architecture, and its peripheral components include input filter capacitors, bootstrap capacitors, an inductor, output filter capacitors and a feedback voltage divider network.

The inductor L2 and output filter capacitors undertake voltage reduction, energy storage and output filtering functions. Feedback resistors R11 and R9 are used to set the output voltage, while capacitor C10 serves for feedback loop compensation and optimization. According to the feedback voltage division ratio, the designed output voltage is approximately 3.3V.

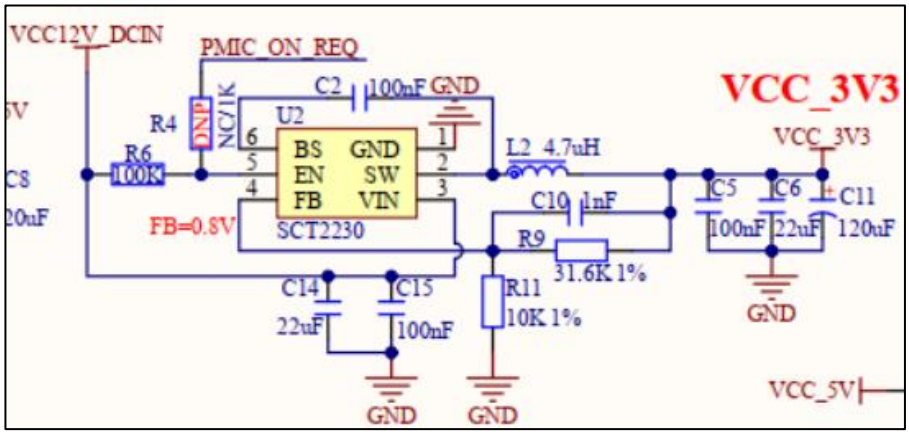

Figure 3.2-2 Description of 3.3V Power Conversion Circuit

3.2.3 Description of 1.8V Linear Regulator Circuit

The 1.8V power supply of the development board is further converted from VCC_3V3 by the low-dropout linear regulator U7, and the output power rail is marked as VCC_1V8. This circuit adopts a fixed 1.8V output LDO chip. It features a simple structure and is suitable for low-voltage power supply scenarios with certain requirements on power noise and ripple.

Input decoupling capacitors are arranged at the LDO input terminal to filter the noise of the preceding power supply and stabilize the input voltage. Capacitors are configured at the output terminal to ensure the stability of the regulator loop and reduce output ripple. The EN enable pin is pulled up to VCC_3V3 through a resistor and kept enabled by default. Therefore, the 1.8V power supply is automatically generated once the 3.3V power supply outputs normally.

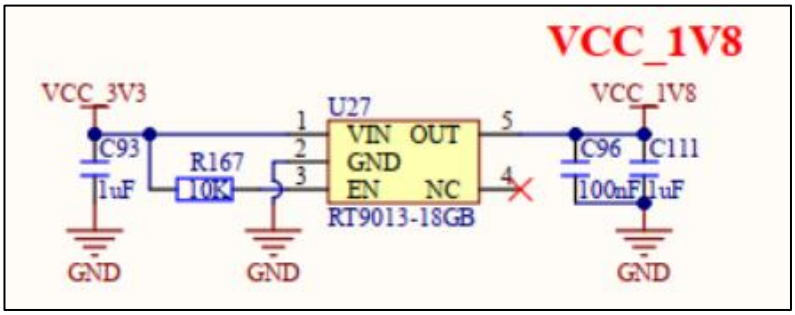

Figure 3.2-3 1.8V Linear Regulator Circuit

3.3 Boot Mode Configuration Interface

The development board is integrated with a BOOT mode configuration interface circuit, whose schematic diagram is shown below.

BOOT DEVICE	BOOT CORE	BOOT0	BOOT1	BOOT2	BOOT3
USB	Cortex-A55	1	1	0	0
EMMC	Cortex-A55	0	0	0	0
SD Card	Cortex-A55	1	0	0	0

Figure 3.3-1 Boot Mode Configuration Interface

The i.MX91 processor on the core board supports multiple boot modes, including booting from eMMC, SD card, and USB. In this circuit, the four BOOT pins are pulled up by the 3.3V NVCC_AON power supply led out from the core board. When a corresponding DIP switch is toggled to the **ON** position, the potentials on both sides of the switch are conducted, pulling the corresponding BOOT pin to a high logic level, defined as logic **1**; otherwise, the pin is at logic **0**.

By configuring the combination of logic 1 and 0 on different BOOT pins, different boot modes can be switched. The supported boot modes and corresponding configurations of the baseboard are listed as follows:

BOOT0	BOOT1	BOOT2	BOOT3	Boot Core	Boot Mode
1	1	0	0	Cortex-A55	USB Boot
0	0	0	0		EMMC card Boot
1	0	0	0		SD Boot

Please pay attention to the sequence of BOOT pin numbers and do not set the DIP switches in reverse order.

When the i.MX91 processor on the core board enters **USB boot mode**, it works as the flashing mode for re-burning system images. Users can select to program the image into the eMMC storage chip or SD card according to software configurations.

When the processor is set to **eMMC boot mode**, it reads and executes the system firmware stored in the eMMC chip for startup.

When the processor is set to **SD card boot mode**, it boots by loading the system firmware saved in the SD card.

In addition, regarding the pull-up power supply for BOOT pins, it is recommended to follow the reference design of this circuit. Use the **NVCC_AON** power rail derived from the core board to supply the BOOT pins, instead of other on-board 3.3V power supplies.

If other on-board 3.3V power supplies are adopted, the slow power-up sequence may cause the processor to fail to sample the BOOT level configuration correctly, further resulting in system image boot failure.

3.4 UART Debug Serial Port (System Debugging)

The development board is equipped with an on-board UART debug serial port adopting the USB Type-C interface. Its schematic diagram is shown in the figure below.

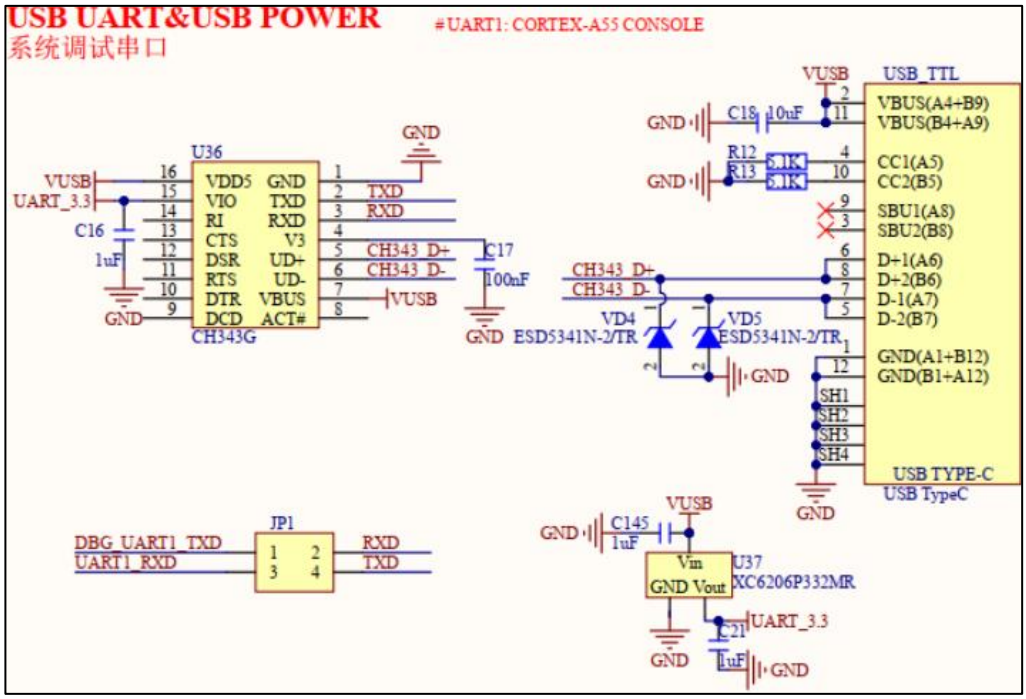

Figure 3.4-1 UART Debug Serial Port

The development board uses **UART1** as the system debug serial port to output boot information and system console logs. To facilitate user debugging, this circuit adopts the CH343G USB-to-serial chip to realize USB to UART conversion. Users only need a USB Type-C data cable to complete data transmission and reception between the host computer and the i.MX91 debug serial port.

In the schematic, U36 is the CH343G chip. Its USB terminal is connected to the USB Type-C debug interface, and its serial port terminal is connected to the UART1 signals of the i.MX91 processor.

After a USB Type-C cable is connected, the 5V power supply (VUSB) input from the USB port is converted into 3.3V by U37 (XC6206P332MR) to supply power for the CH343G chip and related peripheral circuits.

To enhance interface reliability, ESD protection devices are added to the USB data lines D+ and D-. The CC1 and CC2 pins of the Type-C interface are pulled down to GND via 5.1kΩ resistors, configuring the port as a standard USB device endpoint. The TXD and RXD signals output by CH343G are connected to the UART1 of i.MX91 through jumper headers, enabling convenient debug connection and signal switching.

3.5 USB_OTG Interface (System Flashing)

The development board is equipped with a USB_OTG interface in USB Type-C form factor. The corresponding schematic diagram is shown below.

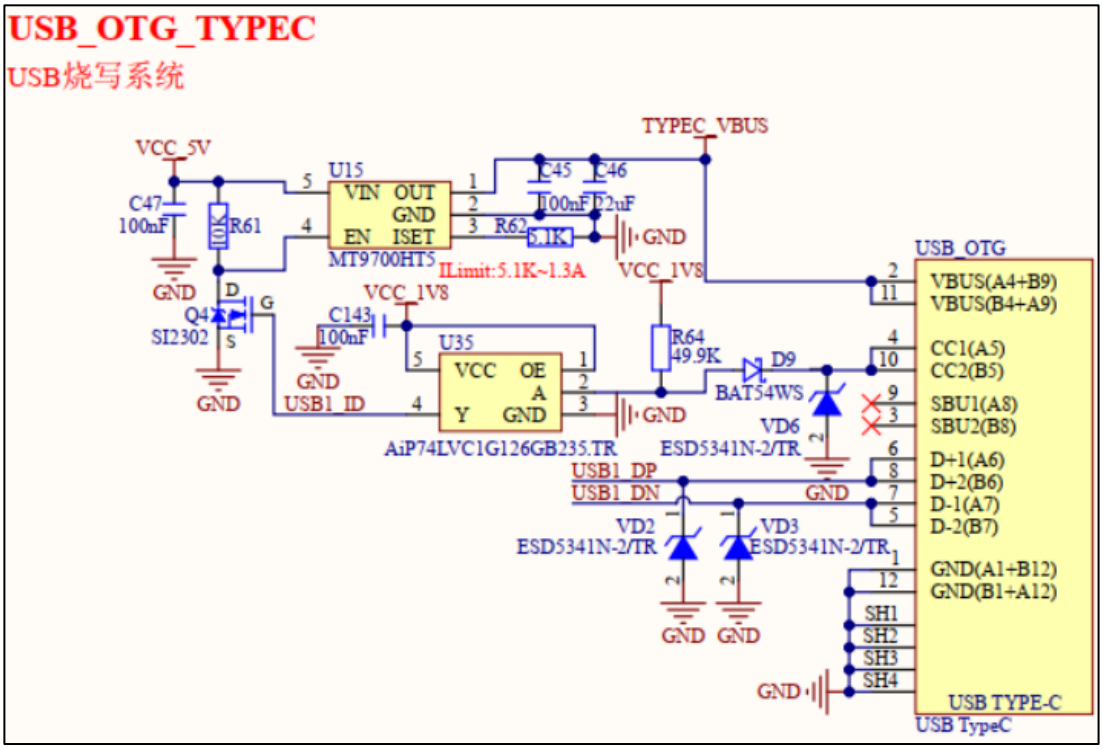

Figure 3.5-1 USB_OTG Interface

The i.MX91 processor on the core board supports entering download mode via the USB OTG interface for system image firmware flashing.

This circuit adopts a USB Type-C connector. This interface can be used not only for system image programming, but also for connecting external USB OTG devices to realize dual-role functionality of USB host and device.

In the circuit, **USB1_DP** and **USB1_DN** are directly connected to the D+ and D- pins of the Type-C interface to complete USB data transmission. CC1 and CC2 are connected to U35 (AiP74LVC1G126) through a detection circuit. After buffering and level conversion, it outputs the **USB1_ID** signal for the processor to identify the current connection status and determine the USB host/device role.

U15 (MT9700) in the schematic is a VBUS current-limiting switch chip. Its input terminal is connected to **VCC_5V**, and the output terminal is connected to **TYPEC_VBUS**, which supplies 5V

power to the Type-C interface. When the processor operates in **Host mode**, U15 is enabled to output VBUS power for external USB devices. When the processor works in **Device mode**, U15 is disabled and no 5V power is output externally. This design meets the requirements of USB OTG host/device role switching and peripheral power supply control.

In addition, ESD protection components are added to the USB data lines and CC detection lines, and the shielded shell of the interface is grounded. This design effectively improves the ESD resistance and operational reliability of the interface.

3.6 Buttons (Reset, Wake-up, User)

The development board is equipped with three mechanical buttons, and the corresponding schematic diagram is shown below.

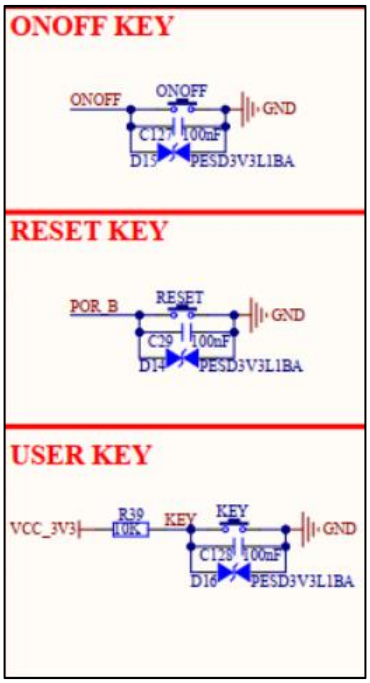

Figure 3.6-1 Buttons

The functions of each button are described as follows:

1.The ONOFF button serves as the power on/off key for the i.MX91 processor. Press and hold the ONOFF button for 5 seconds to shut down the processor; short press the ONOFF button for 0.5 seconds to power on the processor.

It should be further noted that after the processor is shut down by long pressing the ONOFF button, the processor pulls the PMIC_ON_REQ pin low to 0V. If the EN pin of the baseboard DCDC power chip is enabled by the PMIC_ON_REQ signal, the DCDC power supply will be disabled and cut off at this time.

2.The RESET button is used to reset the core board. The RESET signal pin is connected to the PMIC_RST_B control pin of the core board PMIC power management chip. It triggers a power cycle of the PMIC, thereby repowering the processor, LPDDR4, eMMC and other core board devices. The reset signal is active-low.

3.The KEY button is a general-purpose input key, designed for user key input testing.

3.7 Indicator LEDs (Power Indicator, User Indicator)

The development board is equipped with a power indicator LED and a user indicator LED. The corresponding schematic diagram is shown below.

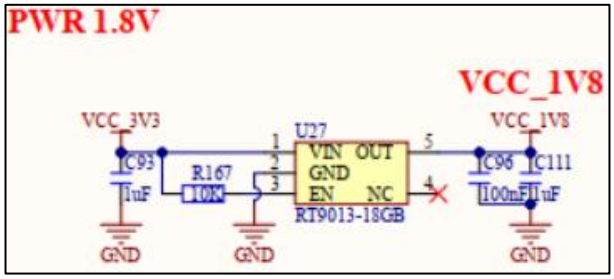

Figure 3.7-1 Indicator LEDs

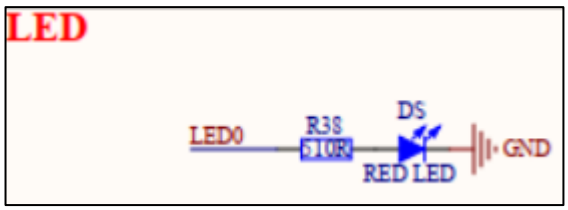

Figure 3.7-2 User Indicator LED

The functions of the indicator lights are as follows:

1. The power indicator is used to indicate the power supply status of the development board baseboard. When the 3.3V power supply works normally, the PWR power indicator remains steadily on. If the indicator is off, it is necessary to check whether the baseboard is powered properly, so as to realize power status indication.

2. The user indicator shows the running state of the development board system program. Users can customize its working modes such as heartbeat blinking, steady on, steady off and flashing to reflect program operation status. By default, this indicator is configured to check whether the system image firmware starts and runs normally when the board is delivered from the factory.

3.8 Adjustable Potentiometer (ADC Voltage Acquisition)

The development board is equipped with an on-board adjustable potentiometer, and its schematic diagram is shown below.

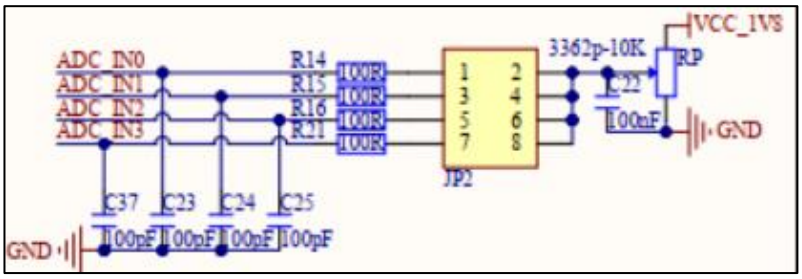

Figure 3.8-1 Adjustable Potentiometer

This circuit serves as an ADC input test circuit for the i.MX91 processor, used for voltage sampling tests and functional verification of the analog input channels **ADC_IN0 ~ ADC_IN3**.

In this circuit, each of the four ADC input signals is connected in series with a 100Ω resistor and parallel with a 100pF capacitor to GND, forming an RC filtering network at the input terminal. It

suppresses high-frequency noise interference and improves the sampling stability of analog-to-digital conversion.

RP (3362P-10K) in the figure is a 10kΩ adjustable potentiometer. Its two ends are connected to **VCC_1V8** and GND respectively, outputting an adjustable analog voltage ranging from 0 to 1.8V. Through the pin header JP2, this voltage can be selectively connected to any ADC input channel, facilitating users to debug, calibrate and test the ADC sampling function of the i.MX91.

In addition, power supply decoupling capacitors are added in the circuit to enhance reference voltage stability and reduce the impact of power noise on ADC sampling results.

3.9 USB HOST Interface

The development board is equipped with two USB HOST interfaces adopting USB Type-A connectors. The corresponding schematic diagram is shown below:

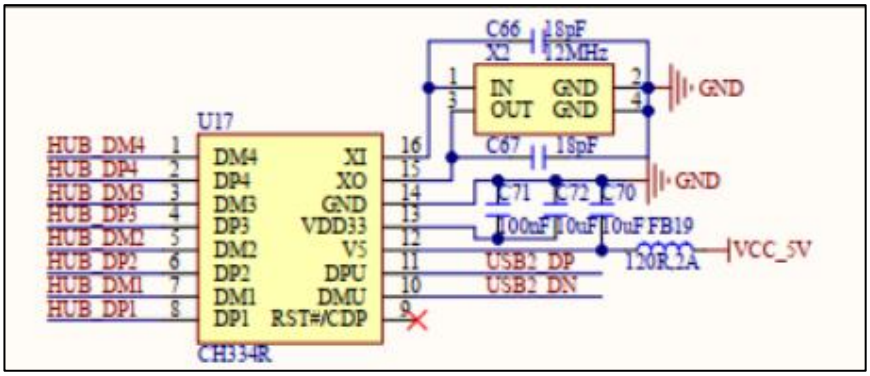

Figure 3.9-1 USB HUB Circuit

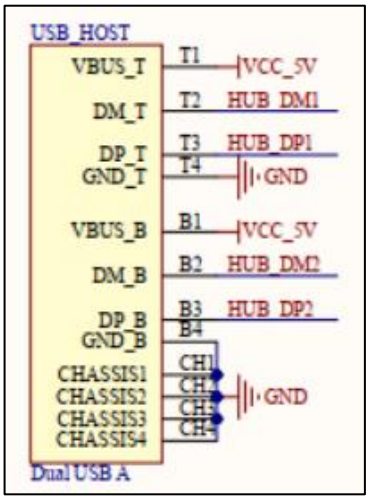

Figure 3.9-2 USB HOST Interface

The development board adopts a USB HUB expansion circuit. It uses the CH334R USB expansion chip to expand the USBH bus interface of the i.MX91 core processor, realizing the function of expanding one USB port into four USB HOST interfaces.

Among them, **HUB_D1** and **HUB_D2** are external USB HOST interfaces, corresponding to **USB_HOST1** and **USB_HOST2** respectively, which can be connected to USB flash drives, keyboards, mice, USB cameras and other peripherals. The other two extended channels are used for connecting a 4G/5G RedCap wireless module and a Wi-Fi & Bluetooth module separately. ESD protection devices are added to this circuit to enhance overall circuit reliability.

3.10 Gigabit Ethernet Interface

The development board is equipped with two on-board Gigabit Ethernet interfaces. The schematic diagram is shown below.

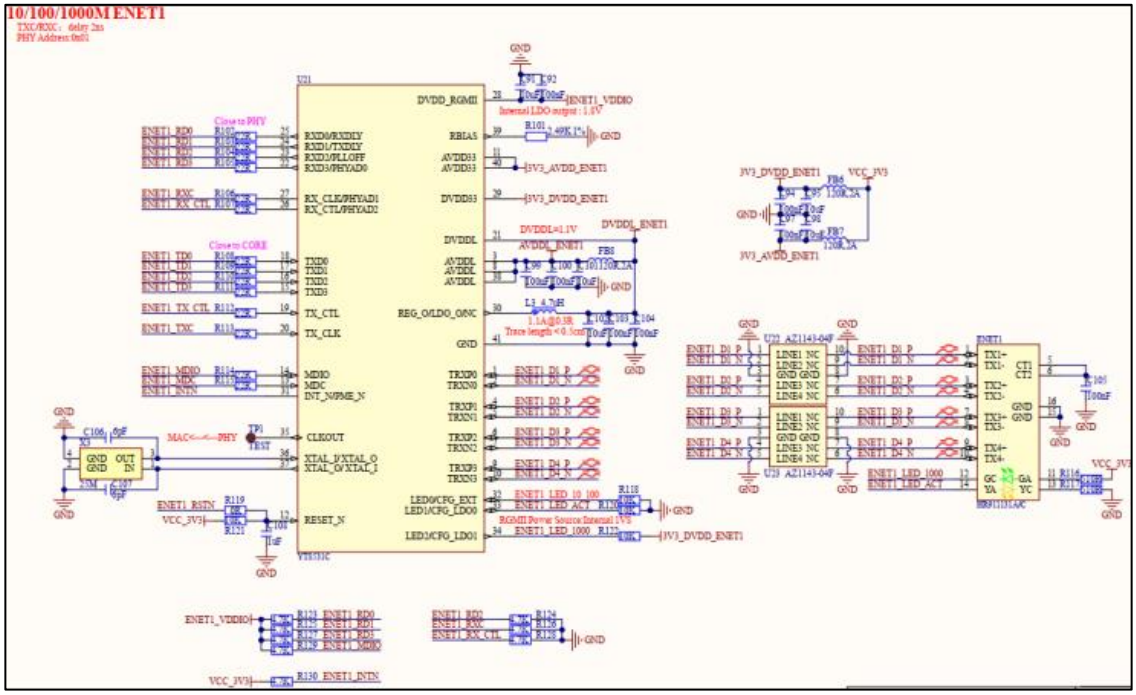

Figure 3.10-1 Gigabit Ethernet Interface ETH1

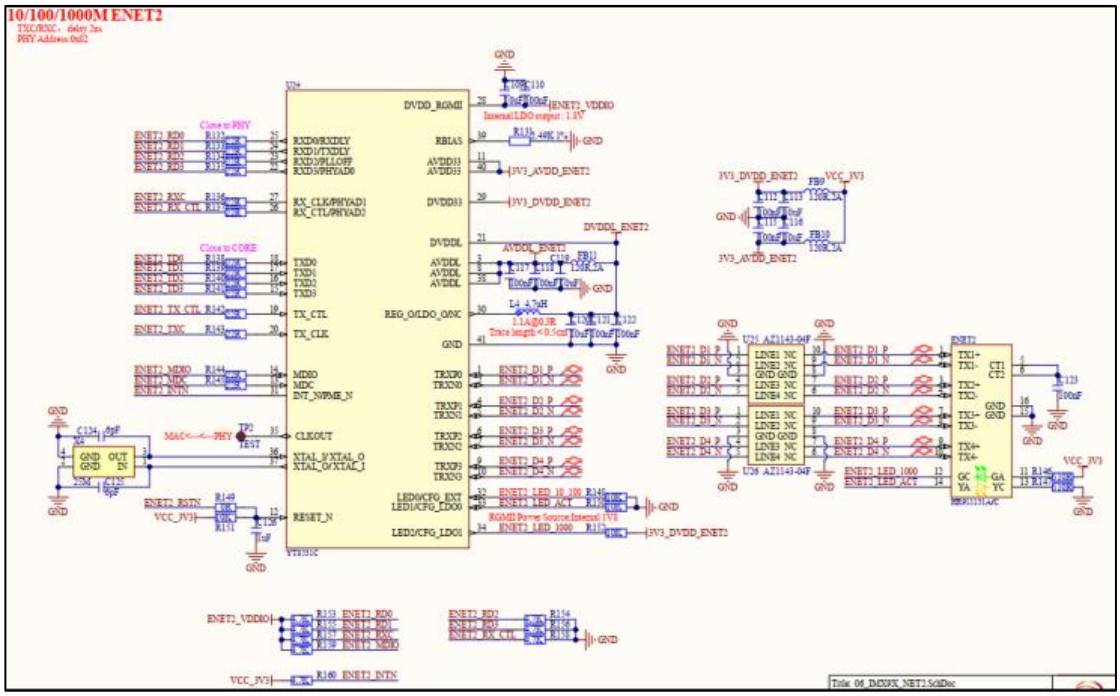

Figure 3.10-2 Gigabit Ethernet Interface ETH2

The i.MX91 processor integrates two built-in Gigabit Ethernet MAC controllers, enabling the provision of two independent Gigabit Ethernet interfaces. This section presents the schematic diagram of **ENET1 (Ethernet Port 1)**, and **ENET2 (Ethernet Port 2)** follows the same circuit design. Please distinguish the network addresses: the address of Ethernet 1 is 1, and the address of Ethernet 2 is 2.

Since the IO power domain of the transmit and receive (TX/RX) pins for network communication on the i.MX93 processor is 1.8V, the RGMII voltage of the PHY chip in this circuit is configured to 1.8V, which is generated by the internal LDO of the PHY chip. As shown in the diagram, the power supply voltage of **ENET1_VDDIO** is 1.8V.

The development board adopts the Gigabit Ethernet PHY chip **YT8531C** produced by Yutai Semiconductor, which supports 10/100/1000Mbps auto-negotiation. The RJ45 connector model is HR911131A, with an integrated network transformer and two status indicators. In accordance with mainstream design specifications: the amber LED flashes to indicate ongoing network data transmission, and the green LED stays steady on to confirm normal network link connection.

It is recommended to adopt a **four-layer PCB design** for Gigabit Ethernet circuits. If a two-layer PCB is used, complete reference planes cannot be maintained, which may result in failure to reach near-gigabit network speeds.

3.11 Audio Interface

The development board is equipped with a high-performance audio codec chip **ES8390** to implement audio playback and recording functions. The corresponding schematic diagram is shown below.

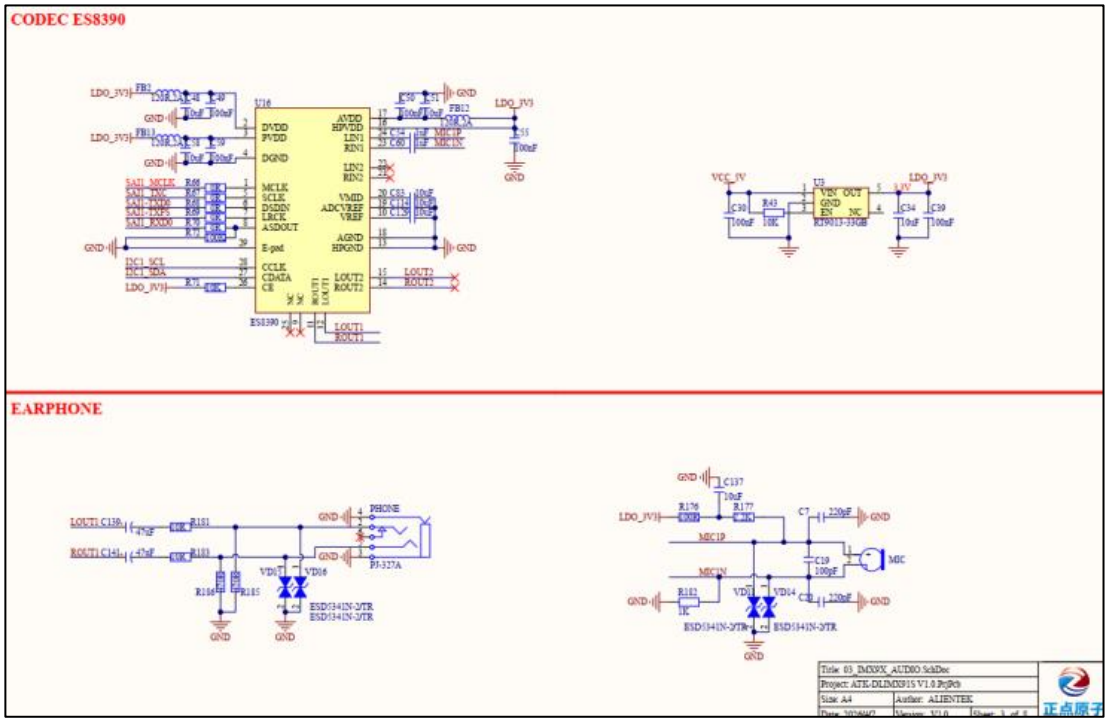

Figure 3.11-1 ES8390 Audio Circuit

This circuit adopts the ES8390 audio codec chip to realize audio playback and recording functions. The ES8390 performs register configuration with the i.MX91 processor via the I2C interface, and transmits audio data through the SAI1 audio interface. Related signals include MCLK, SCLK, LRCK, SDIN and ASDOUT.

In the figure, U16 is the ES8390 chip. Its digital power, analog power and headphone driver power are all supplied by LDO_3V3. Magnetic beads and filter capacitors are added at the power input

terminal to reduce the impact of power noise on audio performance. U3 in the circuit is a 3.3V LDO, which converts the system 5V power into the 3.3V power required by the codec circuit.

The audio output signals LOUT1 and ROUT1 of the ES8390 are connected to the headphone jack through DC blocking capacitors for stereo headphone output. The audio input signals MIC1P and MIC1N are connected to the microphone circuit for voice collection. Filtering, biasing and ESD protection components are integrated on both the headphone and microphone interfaces to enhance anti-interference capability and operational reliability.

3.12 TF Card Interface

The development board is equipped with one TF card interface. The corresponding schematic diagram is shown below.

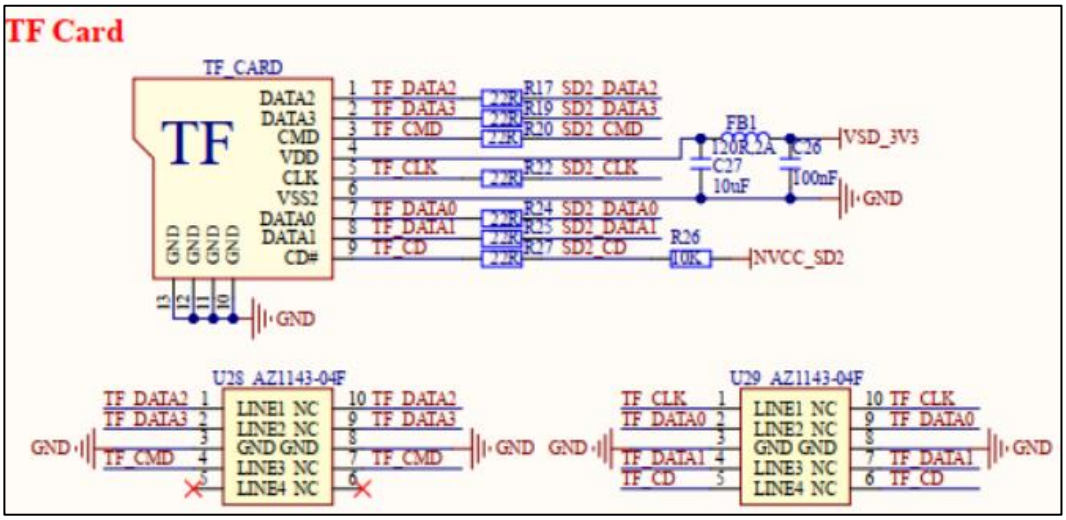

Figure 3.12-1 TF Card Interface

The i.MX91 processor supports three SD interfaces compliant with the **SD 3.0** specification, namely SD1, SD2 and SD3. Among them, the SD1 interface is used for the eMMC storage chip on the core board, while SD2 is assigned to this TF card interface.

Different types of TF cards support communication at two I/O voltage levels: **1.8V** and **3.3V**. Since the 1.8V I/O level enables higher transmission speeds, this circuit is designed to support automatic switching between the two voltage standards.

In the schematic, **TF_CARD** refers to the TF card socket, which adopts a 4-line data bus driving scheme, making it well suited for high-speed storage scenarios.

SD2_CD serves as the hot-swap detection pin. The power rail **VSD_3V3** provides a fixed 3.3V supply generated by the PMIC power management chip on the core board. The voltage levels of the SD2 signal lines and **NVCC_SD2** power supply are automatically determined by the type of inserted TF card.

When a high-speed TF card that supports 1.8V operating voltage is inserted, the SD2 signal lines and NVCC_SD2 power supply will switch to 1.8V; otherwise, they remain at 3.3V.

The TF card voltage level switching function is jointly implemented by the **SD2 controller of the i.MX93 processor** and the core board PMIC chip. For this reason, the SD2 interface **must** be adopted when users design the TF card circuit on the baseboard.

3.13 EEPROM Storage

The development board is equipped with an on-board EEPROM memory chip, model **AT24C64**, with a capacity of 8KB and communicating via the I2C interface. It is available for users to test and apply as required. The corresponding schematic diagram is shown below.

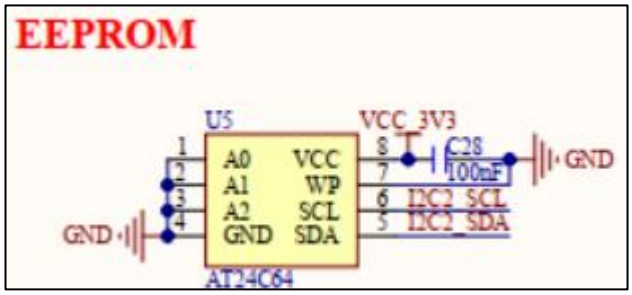

Figure 3.13-1 EEPROM Storage

3.14 Expanded IO Pin Header Group

The development board is equipped with a set of expanded IO pin headers. The relevant schematic diagram is shown below.

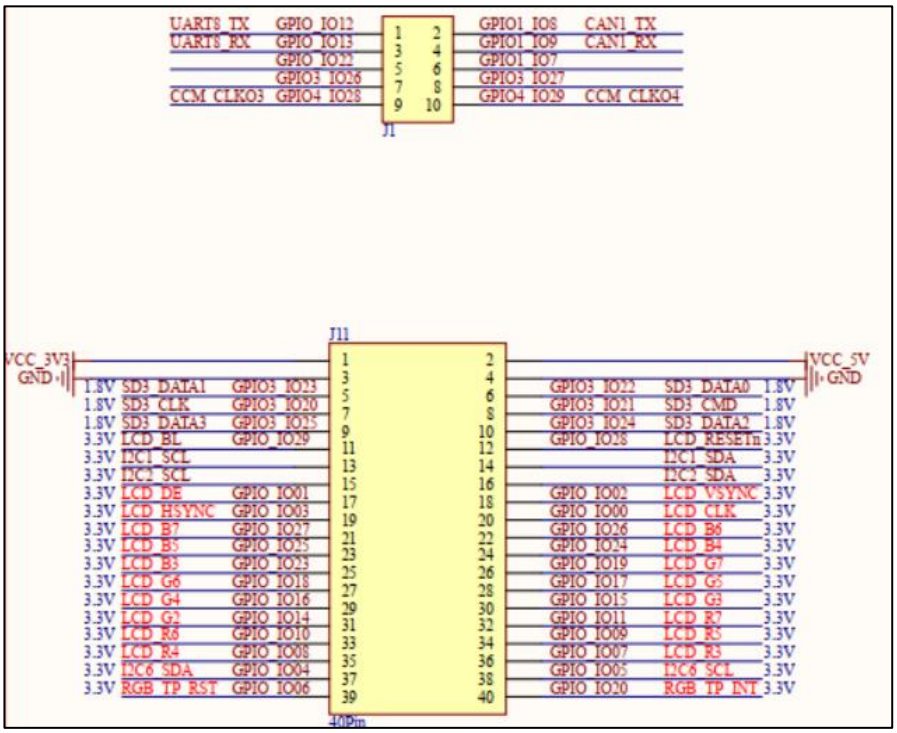

Figure 3.14-1 Expanded IO Pin Header Group

The development board adopts one set of 40-pin headers with a 2.5 mm pitch and one set of 10-pin headers with a 2.5 mm pitch, leading out partial GPIO pins, as well as 5V, 3.3V and GND pins. Users can connect various external modules through these GPIO pins to realize more innovative applications.

It should be specially noted that these expanded GPIO pins are not independently dedicated. Almost all of them are multiplexed with the pins of the on-board functional circuits of the development board. Therefore, when using these led-out GPIOs, users must check the configuration of the baseboard

functional circuits corresponding to these pins, such as pull-up/pull-down resistors, parallel capacitors, and software occupancy. If the on-board circuits cause usage conflicts, relevant peripheral devices need to be modified or removed accordingly.

Chapter 4. Precautions for Using the Development Board

To help users better utilize the Atom ATK-DIMX91S Development Board, this section outlines important usage precautions. Please follow these guidelines during operation to avoid unnecessary faults and issues.

(1) When you intend to configure an IO pin for extended functions, please first refer to the development board schematic. Verify whether the pin is connected to any on-board peripheral and check for potential functional interference. Only use the IO pin after confirming there is no conflict.

(2) If the LCD screen displays a pure white screen, first check whether the screen flex cable is securely inserted and correctly oriented (try unplugging and reinserting the cable). Also inspect the contacts of the FPC connector for damage or poor contact.

(3) The development board is officially designed for 12V DC power supply. It is not recommended to use power adapters with other voltage specifications. Improper supply voltage will cause abnormal operation of the board.

If you have any technical questions or problems during the use of the ATK-DIMX91S Development Board, please contact the official online technical support of ALIENTEK to consult and obtain troubleshooting solutions.

This completes the hardware introduction of the ALIENTEK ATK-DIMX91S Development Board. The hardware design scheme is provided for user reference. Please contact us to report and correct any errors in this manual.